Multi Media Card Connector

Push-in Push-Out Type

KINGFONT
You can rely on .....

TL9000 IECQ TL9000 IECQ TL9000 IECQ TL9000 IECQ TL9000 IECQ TL9000 IECQ TL9000 IECQ TL9000

Part No:

SDBMB-00715B000

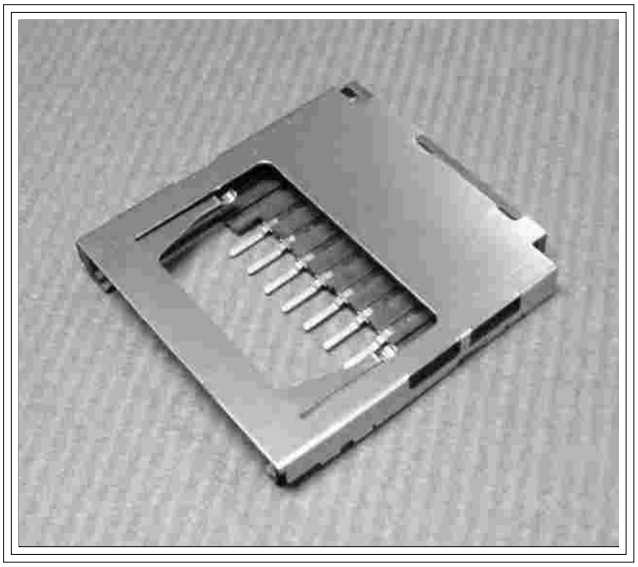

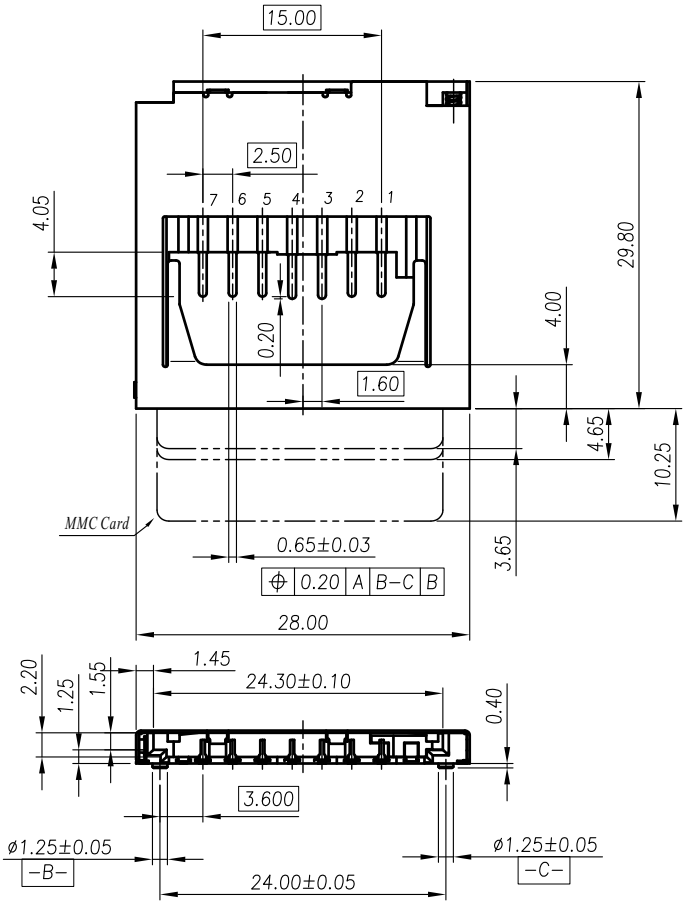

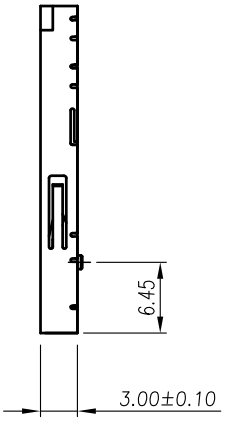

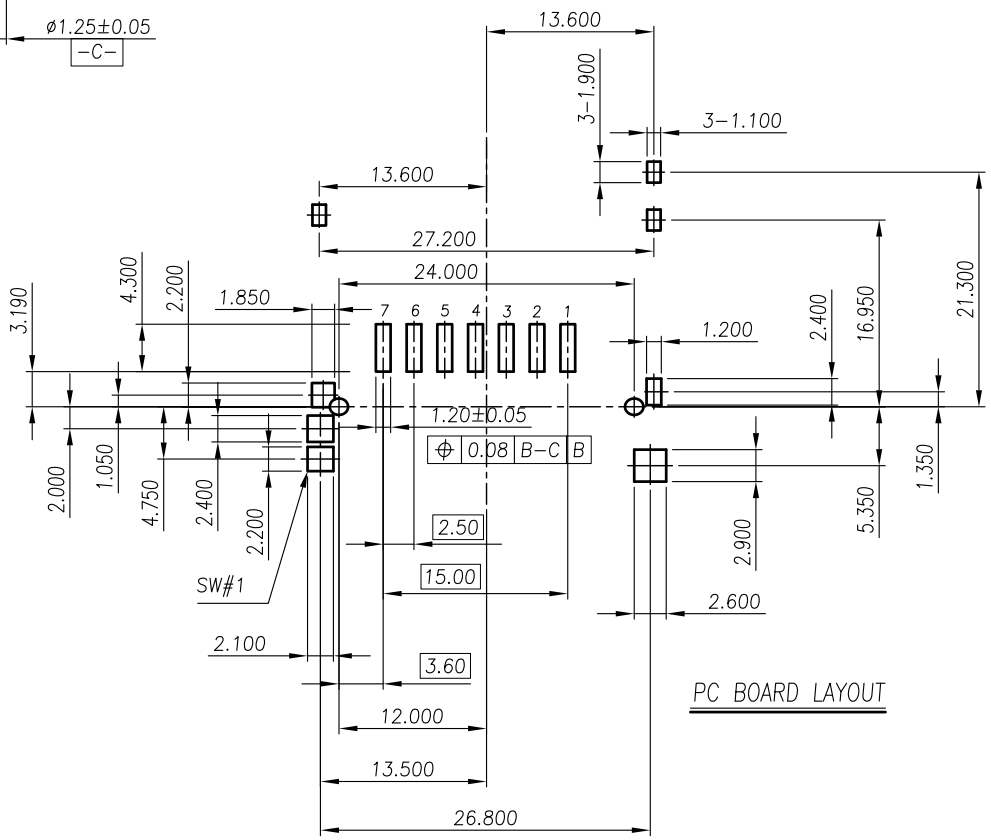

Specification:
Withstanding Voltage: 500V AC
Max for 1 Minute
Insulation Resistance: 1,000 M Ohms
Voltage Rating: 250V AC
Current Rating: 0.5A AC/DC Max
Contact Resistance: 40M Ohms Max
Operating Temperature:-25 C +85 C
Insertion Cycles: 10,000 Times

Application:
For Multi Media Card Use Only

Material And Finish:
Contact: Phosphor Bronze
Tin/Lead 100 at Solder Tail
Contact Area Gold Plating 15
Cover: Brass, Nickle Plating For All
Housing: LCP, Glass Fiber