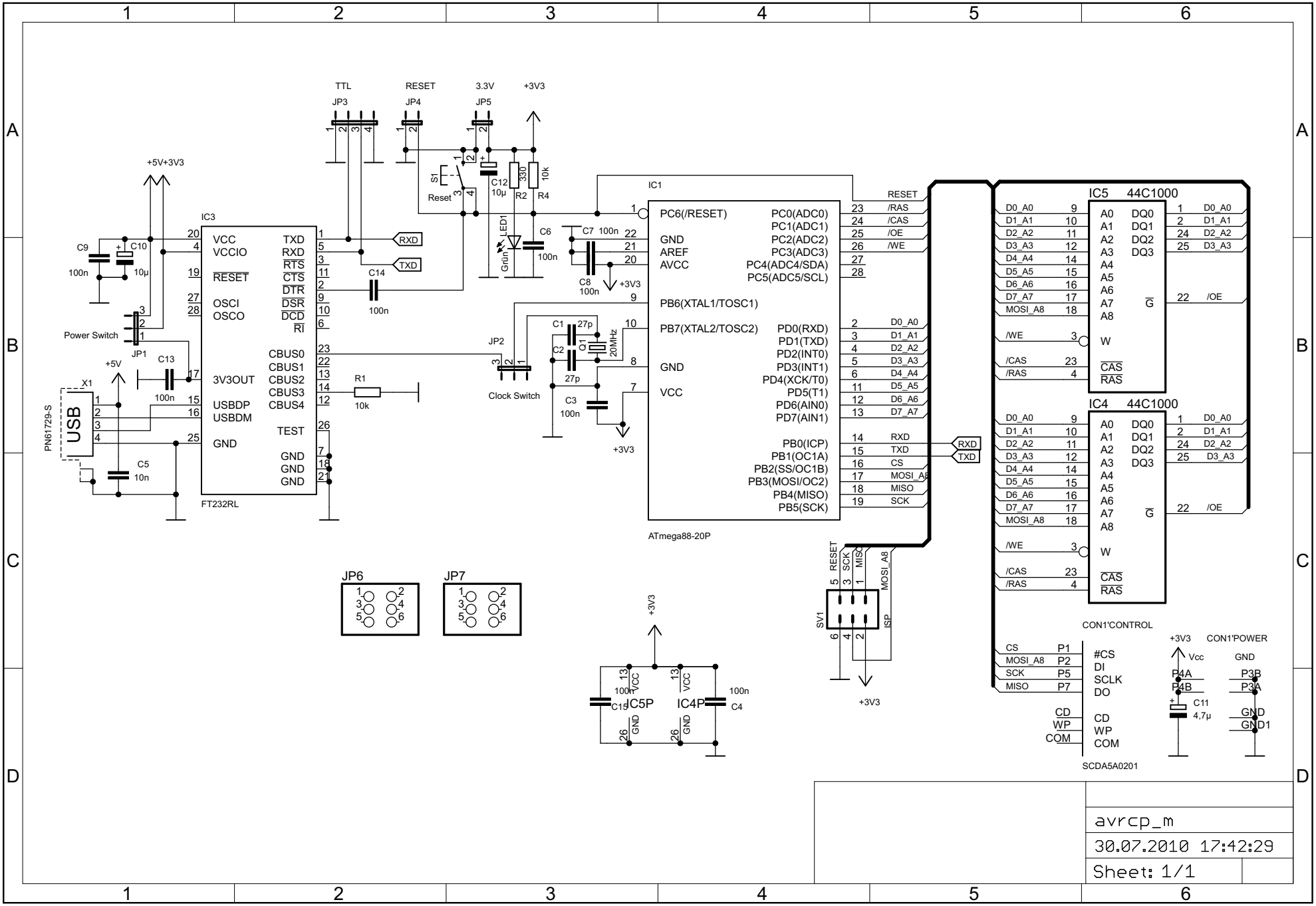
TTL
RESET
3.3V
+3V3
JP3
JP4
JP5
S1
Reset
C12
10µ
R2
330
R4
10k
LED1
Grün
C6
100n
C7
100n
C8
100n
+5V+3V3
IC3
C9
100n
C10
10µ
Power Switch
JP1
C13
100n
+5V
X1
USB
PN61729-S
C5
10n
VCC
VCCIO
RESET
OSCI
OSCO
3V3OUT
USBDP
USBDM
GND
TXD
RXD
RTS
CTS
DTR
DSR
DCD
RI
CBUS0
CBUS1
CBUS2
CBUS3
CBUS4
TEST
GND
GND
GND
FT232RL
RXD
TXD
C14
100n
R1
10k
JP2
Clock Switch
C1
27p
C2
27p
Q1
20MHz
C3
100n
+3V3
IC1
PC6(/RESET)
GND
AREF
AVCC
PB6(XTAL1/TOSC1)
PB7(XTAL2/TOSC2)
GND
VCC
PC0(ADC0)
PC1(ADC1)
PC2(ADC2)
PC3(ADC3)
PC4(ADC4/SDA)
PC5(ADC5/SCL)
PD0(RXD)
PD1(TXD)
PD2(INT0)
PD3(INT1)
PD4(XCK/T0)
PD5(T1)
PD6(AIN0)
PD7(AIN1)
PB0(ICP)
PB1(OC1A)
PB2(SS/OC1B)
PB3(MOSI/OC2)
PB4(MISO)
PB5(SCK)
ATmega88-20P
RESET
/RAS
/CAS
/OE
/WE
D0_A0
D1_A1
D2_A2
D3_A3
D4_A4
D5_A5
D6_A6
D7_A7
RXD
TXD
CS
MOSI_A8
MISO
SCK
IC5 44C1000
IC4 44C1000
A0
A1
A2
A3
A4
A5
A6
A7
A8
DQ0
DQ1
DQ2
DQ3
G
W
CAS
RAS
MOSI_A8
JP6
JP7
+3V3
IC5P
IC4P
C15
100n
C4
100n
VCC
GND
SV1
ISP
CON1'CONTROL
CS
MOSI_A8
SCK
MISO
P1
P2
P5
P7
#CS
DI
SCLK
DO
CD
WP
COM
SCDA5A0201
CON1'POWER
Vcc
GND
P4A
P4B
P3B
P3A
C11
4,7µ
GND
GND1
avrcp_m
30.07.2010 17:42:29
Sheet: 1/1