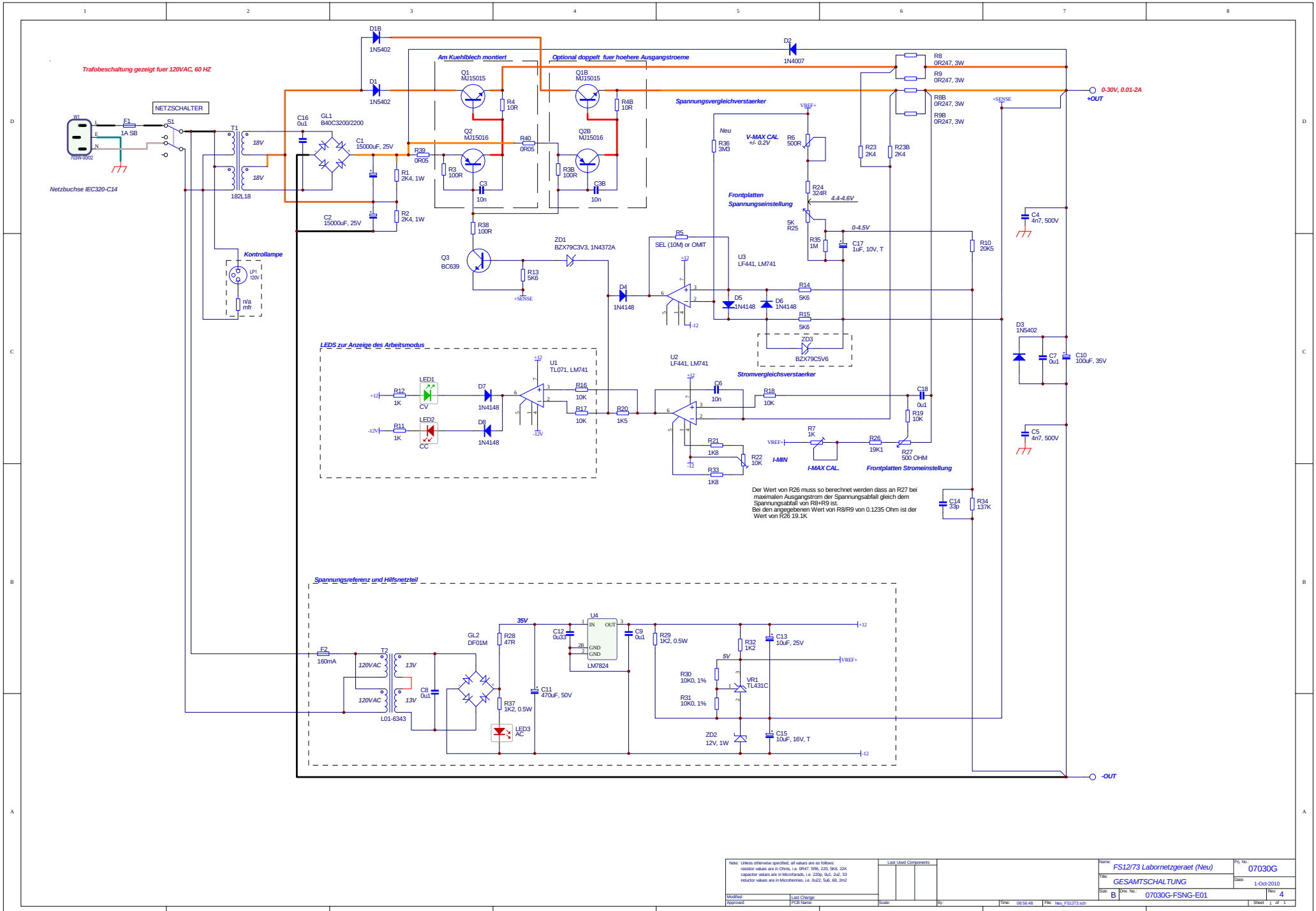

Note: Unless otherwise specified, all values are as follows: resistor values are in Ohms, i.e. 0R47, 5R6, 220, 5K6, 22K; capacitor values are in Microfarads, i.e. 220p, 0u1, 2u2, 33; inductor values are in Microhenries, i.e. 0u22, 5u6, 68, 2m2

Last Used Components

Name:	FS12/73 Labornetzgeraet (Neu)	Drg. No.:	07030G
Title:	GESAMTSCHALTUNG	Date:	1-Oct-2010
Size: B	Drw. No.: 07030G-FSNG-E01	Rev:	4
Modified:	Last Change:	Time: 08:56:48	File: Neu_FS1273.sch
Approved:	PCB Name:	Scale:	By:
			Sheet 1 of 1