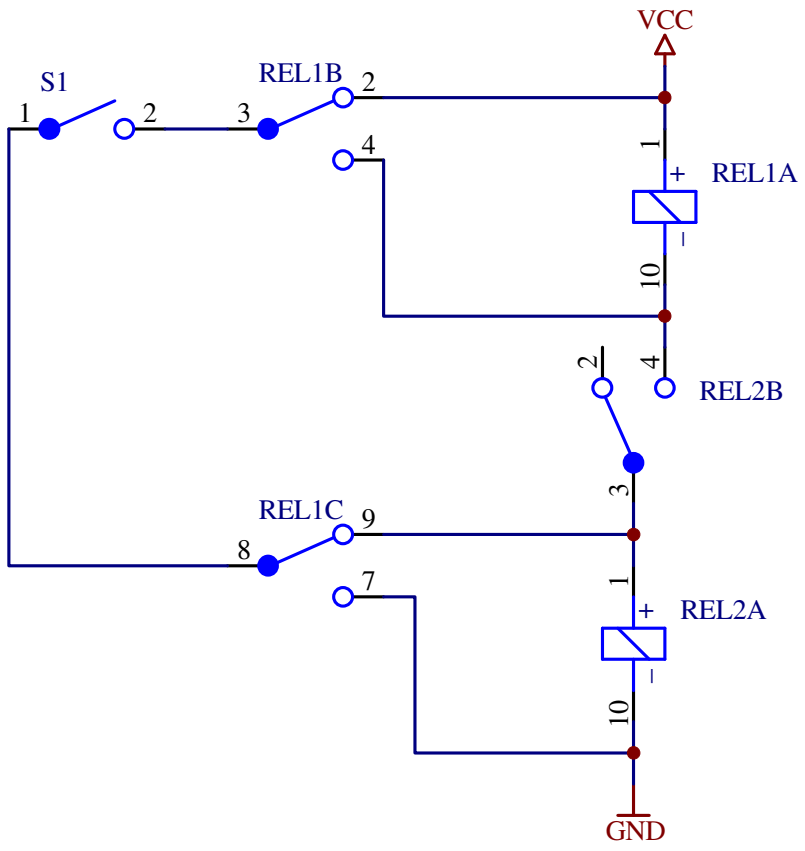
VCC
S1
REL1B
1
2
3
2
4
1
+
REL1A
10
2
4
REL2B
3
REL1C
9
8
7
1
+
REL2A
10
GND