5-3. SCHEMATIC DIAGRAM — SURROUND SECTION —

• See page 57 for IC Block Diagrams.

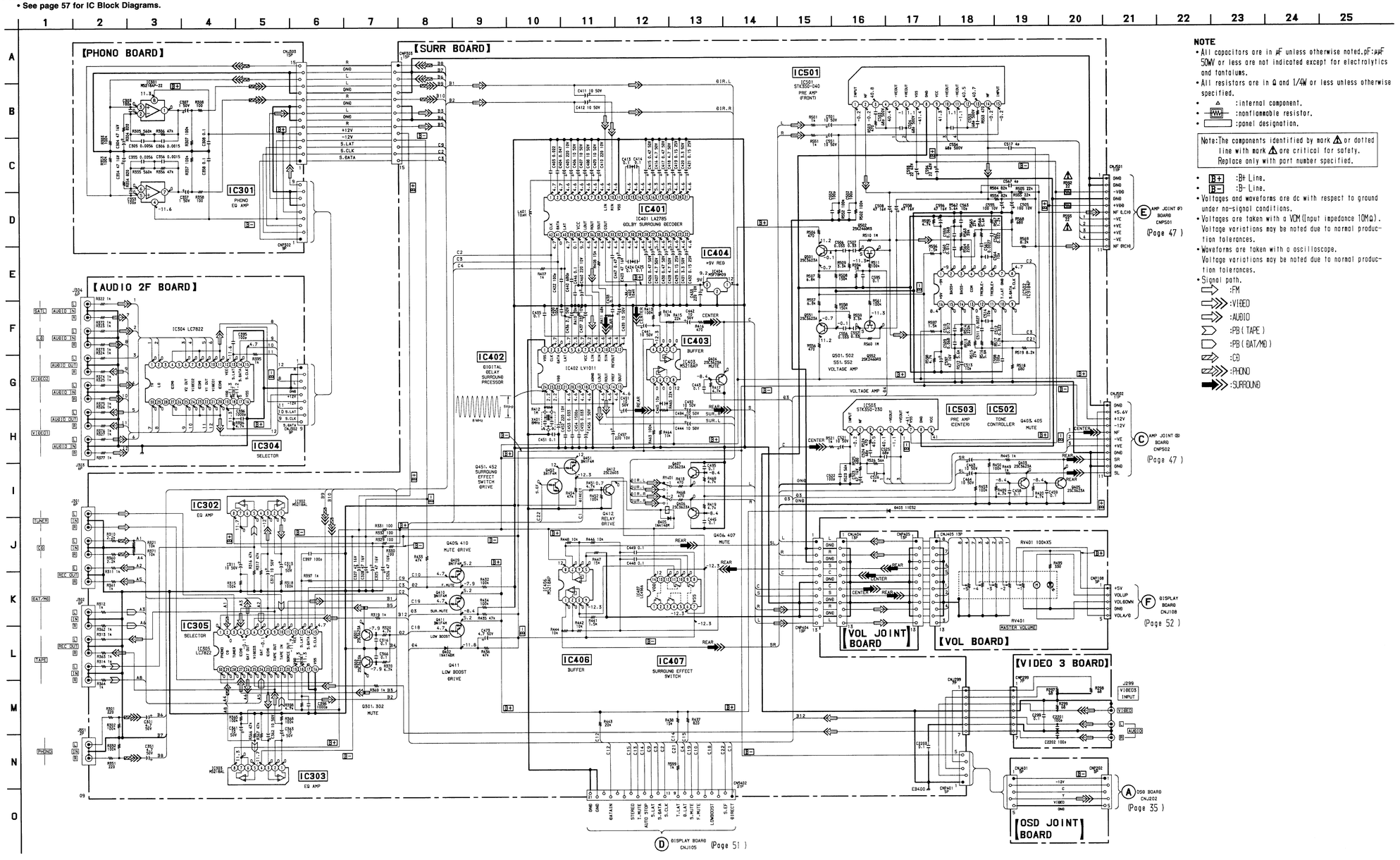

NOTE

- All capacitors are in μF unless otherwise noted. pF: μμF
  50WV or less are not indicated except for electrolytics and tantalums.
- All resistors are in Ω and 1/4W or less unless otherwise specified.
- △ :internal component.
- ▭ :nonflammable resistor.
- ▭ :panel designation.

Note: The components identified by mark ⚠ or dotted line with mark ⚠ are critical for safety. Replace only with part number specified.

- B+ :B+ Line.
- B− :B− Line.
- Voltages and waveforms are dc with respect to ground under no-signal conditions.
- Voltages are taken with a VOM (Input impedance 10MΩ). Voltage variations may be noted due to normal production tolerances.
- Waveforms are taken with a oscilloscope. Voltage variations may be noted due to normal production tolerances.
- Signal path.
  - :FM
  - :VIDEO
  - :AUDIO
  - :PB (TAPE)
  - :PB (DAT/MD)
  - :CD
  - :PHONO
  - :SURROUND