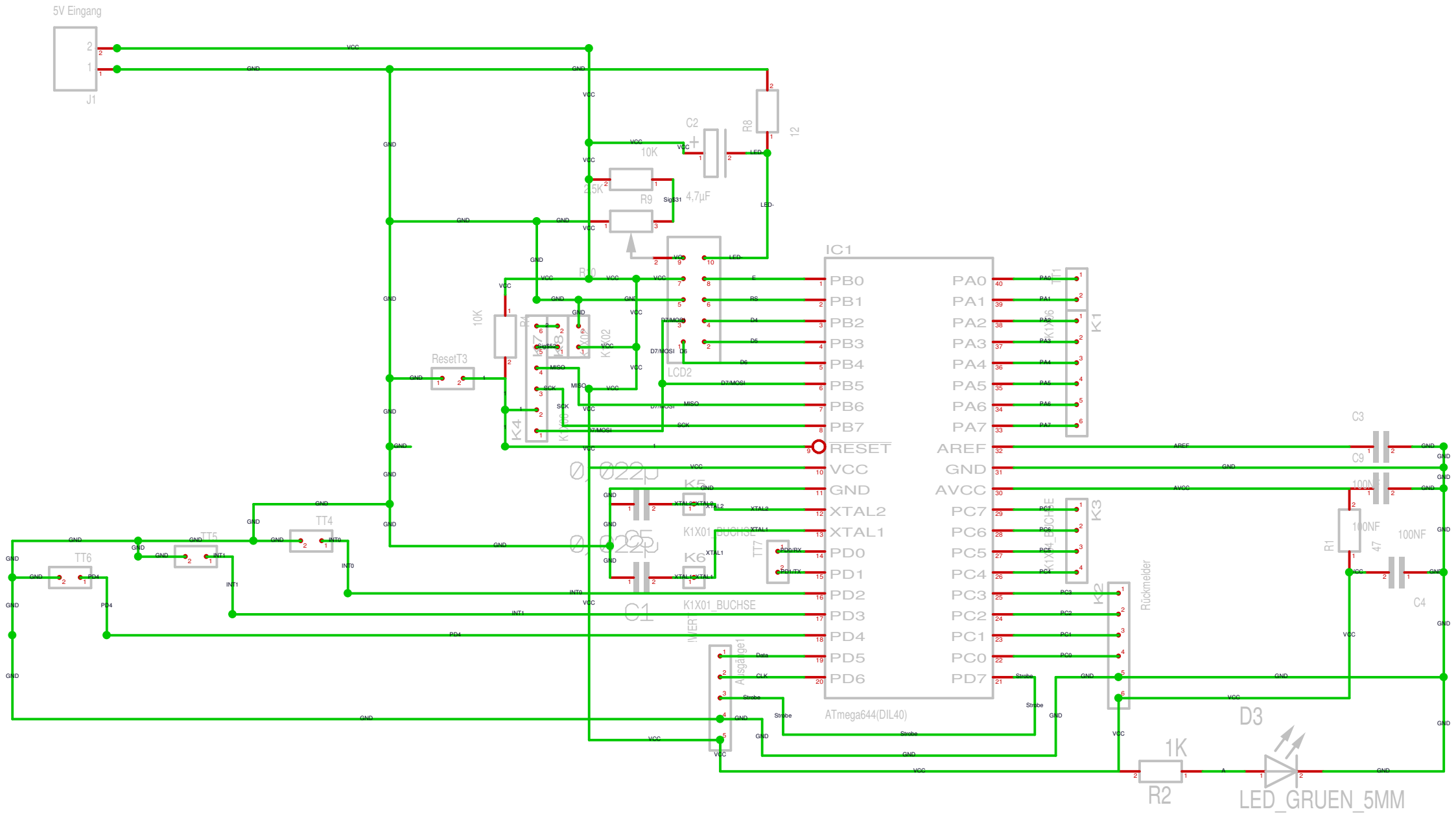
5V Eingang
J1
C2
4,7µF
R8
12
10K
R9
2,5K
LCD2
IC1
PB0
PB1
PB2
PB3
PB4
PB5
PB6
PB7
RESET
VCC
GND
XTAL2
XTAL1
PD0
PD1
PD2
PD3
PD4
PD5
PD6
PA0
PA1
PA2
PA3
PA4
PA5
PA6
PA7
AREF
GND
AVCC
PC7
PC6
PC5
PC4
PC3
PC2
PC1
PC0
PD7
ATmega644(DIL40)
K1
K3
K2
Rückmelder
C3
C9
100NF
R1
47
C4
D3
1K
R2
LED_GRUEN_5MM
ResetT3
TT4
TT5
TT6
TT7
K5
K6
K1X01_BUCHSE
C1
0,022µ
0,022µ
Ausgänge1
Data
CLK
Strobe
VCC
GND