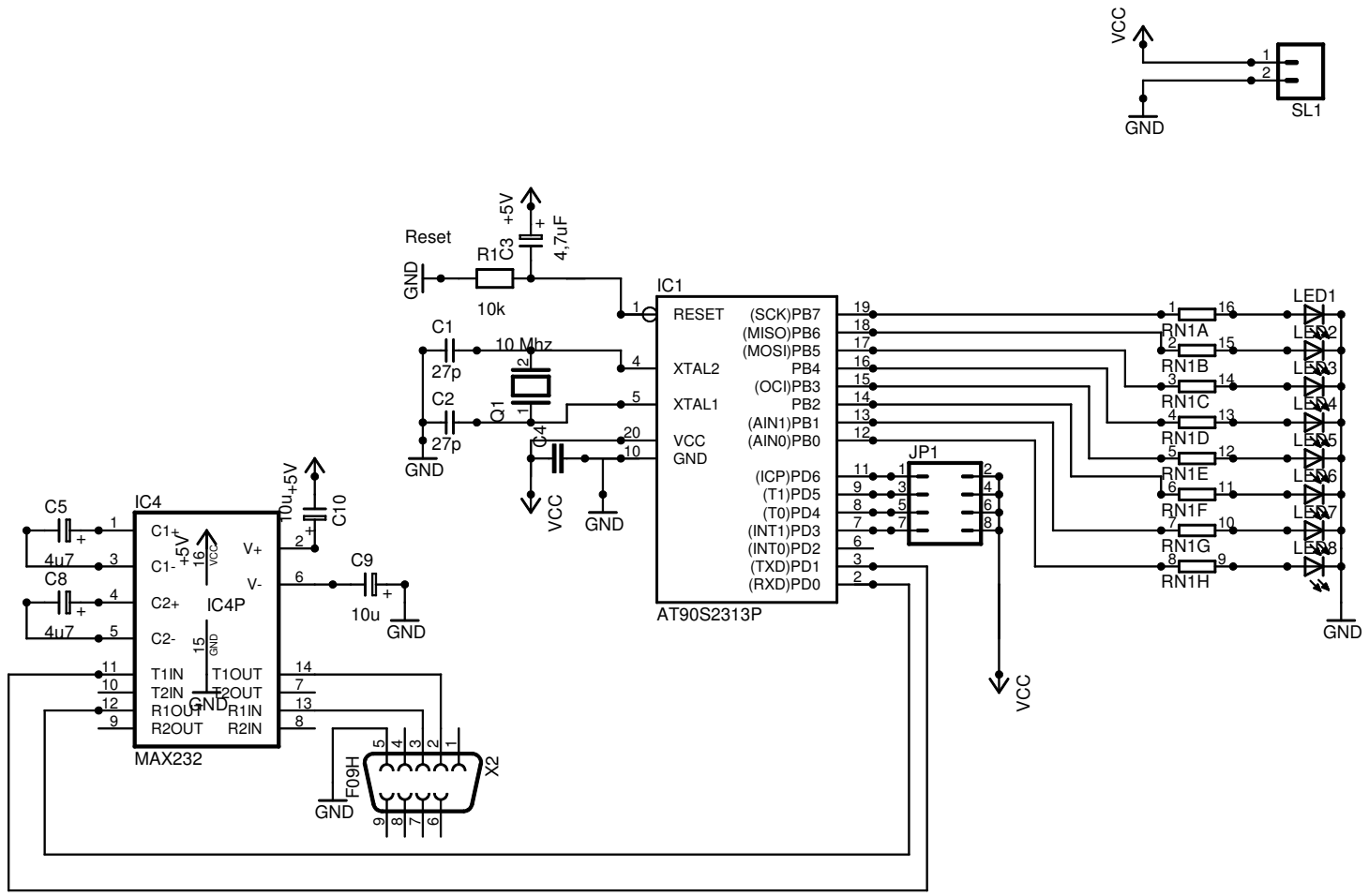
VCC
GND
SL1
Reset
GND
R1
10k
C3
4,7uF
+5V
IC1
RESET
XTAL2
XTAL1
VCC
GND
(SCK)PB7
(MISO)PB6
(MOSI)PB5
PB4
(OCI)PB3
PB2
(AIN1)PB1
(AIN0)PB0
(ICP)PD6
(T1)PD5
(T0)PD4
(INT1)PD3
(INT0)PD2
(TXD)PD1
(RXD)PD0
AT90S2313P
C1
27p
C2
27p
10 Mhz
Q1
C4
JP1
RN1A
RN1B
RN1C
RN1D
RN1E
RN1F
RN1G
RN1H
LED1
LED2
LED3
LED4
LED5
LED6
LED7
LED8
IC4
C5
4u7
C8
4u7
C1+
C1-
C2+
C2-
V+
V-
IC4P
T1IN
T2IN
R1OUT
R2OUT
T1OUT
T2OUT
R1IN
R2IN
MAX232
10u
C10
C9
10u
X2
F09H