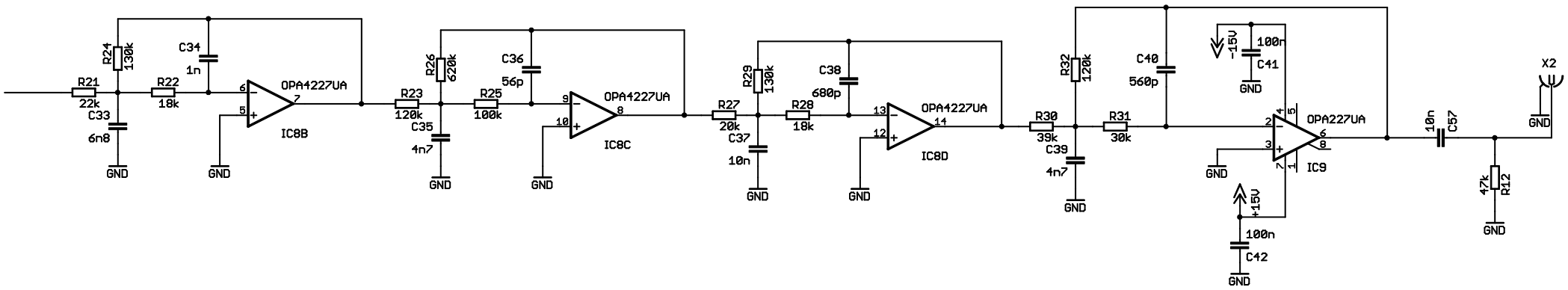
R21
22k
R22
18k
R24
130k
C33
6n8
C34
1n
OPA4227UA
IC8B
R23
120k
R26
620k
C35
4n7
R25
100k
C36
56p
OPA4227UA
IC8C
R27
20k
R29
130k
C37
10n
R28
18k
C38
680p
OPA4227UA
IC8D
R30
39k
R32
120k
C39
4n7
R31
30k
C40
560p
-15V
100n
C41
OPA227UA
IC9
+15V
100n
C42
10n
C57
47k
R12
X2
GND