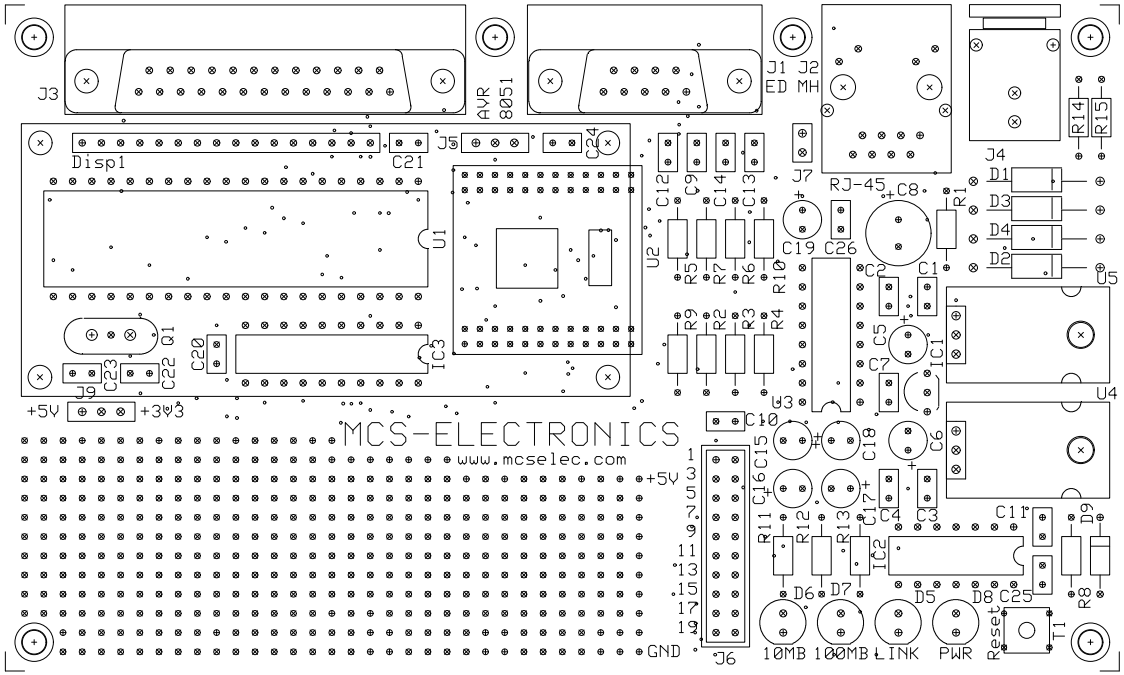
J3
AVR
8051
J1 J2
ED MH
R14
R15
J4
Disp1
C21
J5
C24
C12
C9
C14
C13
J7
RJ-45
C8
R1
D1
D3
D4
D2
U1
U2
R5
R7
R6
R10
C19
C26
C2
C1
U5
R9
R2
R3
R4
C5
IC1
Q1
C20
IC3
C23
C22
C7
J9
U3
U4
+5V
+3V3
C10
MCS-ELECTRONICS
www.mcselec.com
C15
C18
C6
+5V
C16
R11
R12
R13
C17
C4
C3
C11
D9
IC2
D6
D7
D5
D8
C25
R8
GND
J6
10MB
100MB
LINK
PWR
Reset
T1