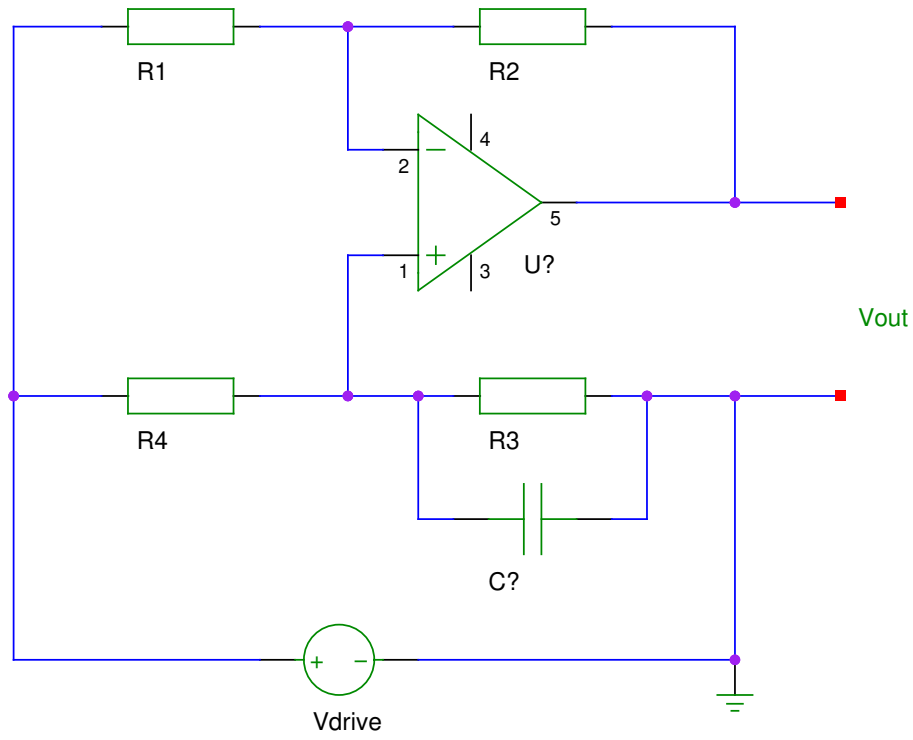

Vout = Vdrive * (R3 – R2 / R1 * R4) / (R3 + R4)

Wheatstone Bridge – Deviation Measurement Circuit

"Application Manual for Computing Amplifiers". Philbrick Research, Inc. 1966.

TITLE

FILE:	REVISION:
PAGE OF	DRAWN BY: