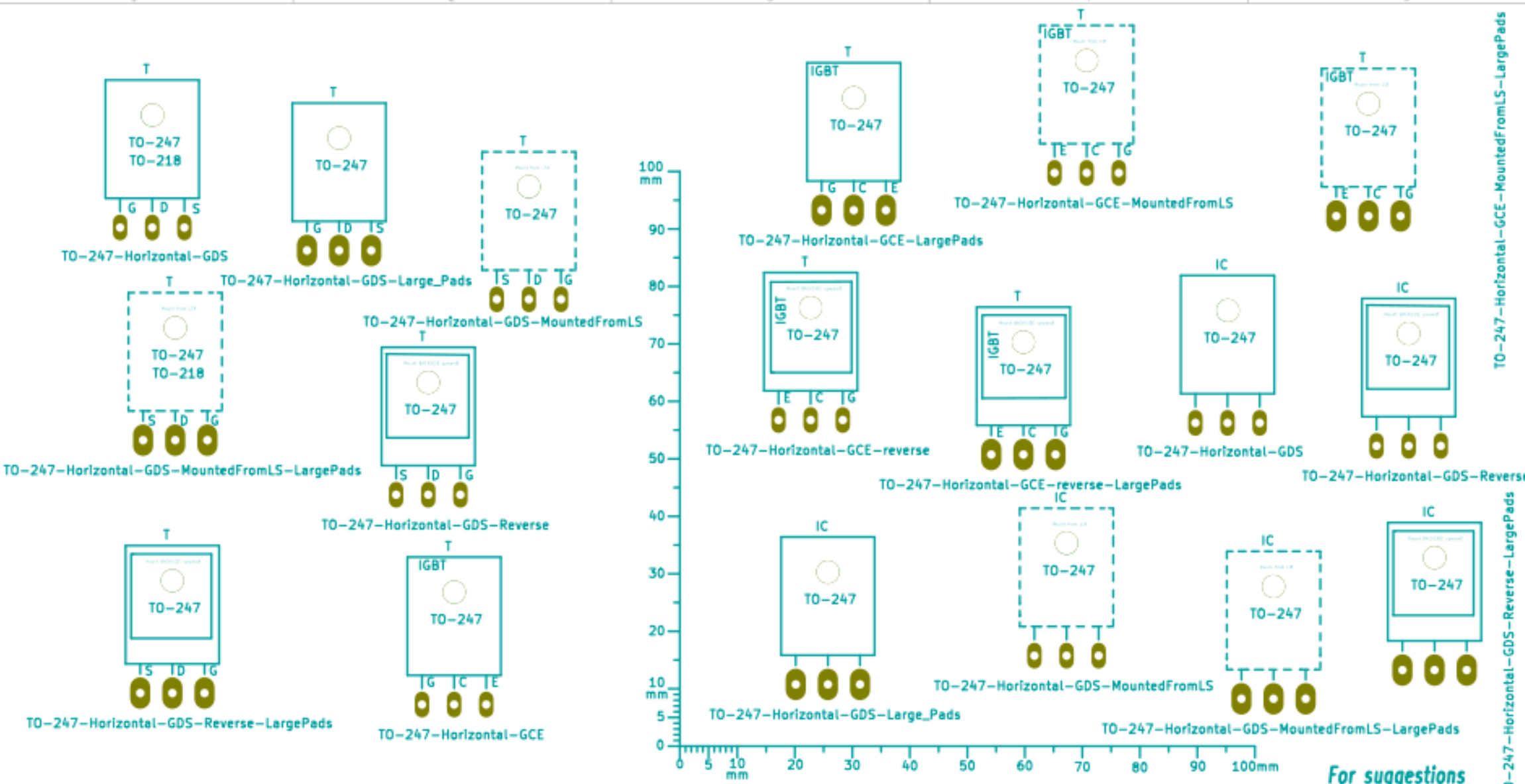

KiCAD Footprints of some TO-247 housings from the file Transistor_TO-247_RevC.mod

Author: Bernd Wiebus / Uedem / Germany / 18 February 2010

Licence: CC-Zero / Public Domain
NO RESTRICTION ! NO WARRANTY!
http://creativecommons.org/

For suggestions and improvements please contact me at bernd.wiebus@gmx.de

File: Transistor_TO-247_RevC_Part1.kicad_pcb
Sheet:
Title:
Size: A4 | Date: | Rev:
KiCad E.D.A. | Id: 1/1