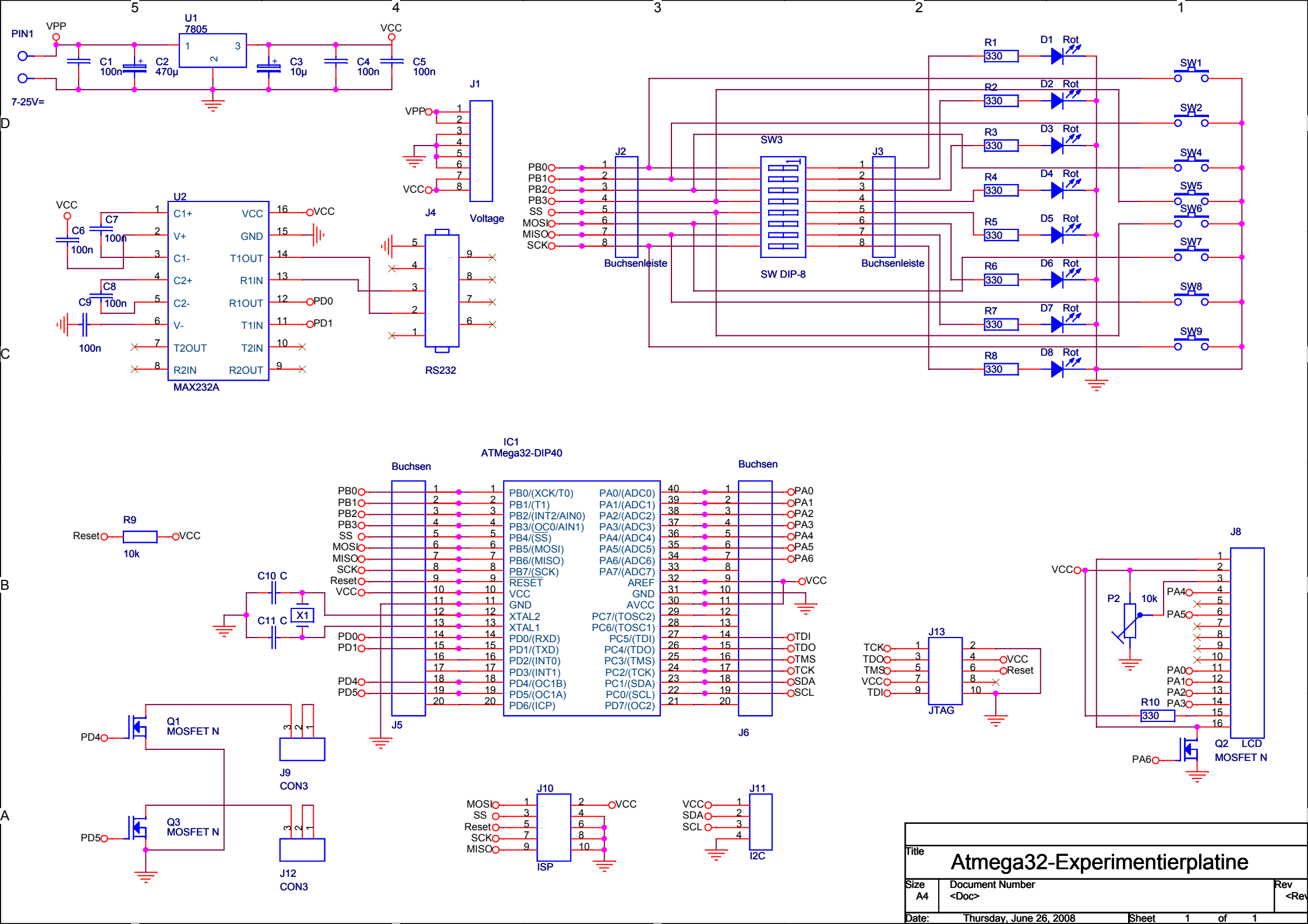

Title	Atmega32-Experimentierplatine		
Size A4	Document Number <Doc>		Rev <Rev
Date: Thursday, June 26, 2008		Sheet 1 of 1	