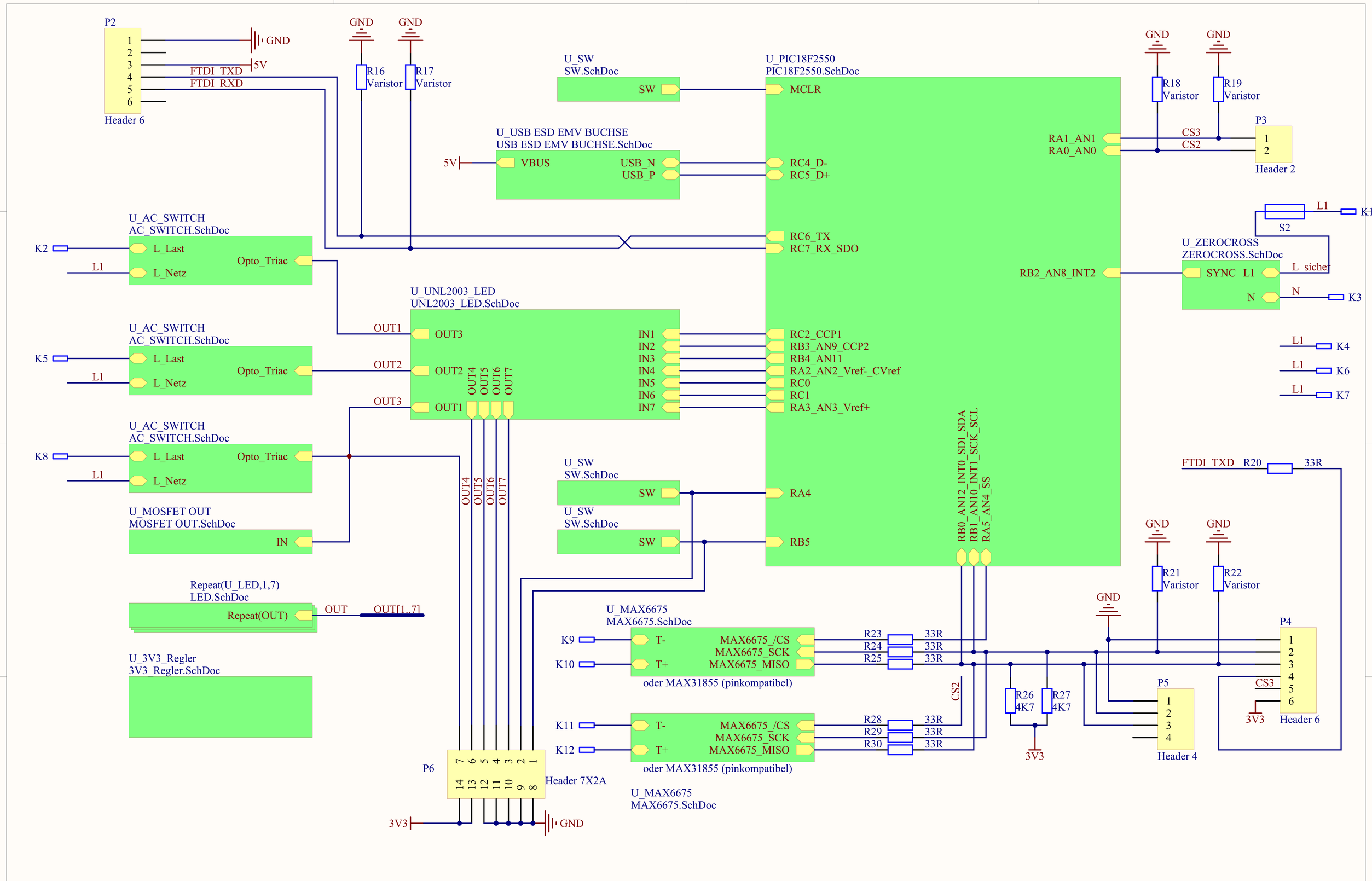
P2
Header 6
GND
5V
FTDI_TXD
FTDI_RXD
R16
Varistor
R17
Varistor
U_SW
SW.SchDoc
SW
U_PIC18F2550
PIC18F2550.SchDoc
MCLR
U_USB ESD EMV BUCHSE
USB ESD EMV BUCHSE.SchDoc
VBUS
USB_N
USB_P
RC4_D-
RC5_D+
RA1_AN1
RA0_AN0
R18
Varistor
R19
Varistor
CS3
CS2
P3
Header 2
U_AC_SWITCH
AC_SWITCH.SchDoc
K2
L1
L_Last
L_Netz
Opto_Triac
RC6_TX
RC7_RX_SDO
L1
K1
S2
U_ZEROCROSS
ZEROCROSS.SchDoc
SYNC
L1
L_sicher
N
K3
RB2_AN8_INT2
U_UNL2003_LED
UNL2003_LED.SchDoc
OUT1
OUT2
OUT3
OUT4
OUT5
OUT6
OUT7
IN1
IN2
IN3
IN4
IN5
IN6
IN7
RC2_CCP1
RB3_AN9_CCP2
RB4_AN11
RA2_AN2_Vref-_CVref
RC0
RC1
RA3_AN3_Vref+
K4
K6
K7
K5
K8
U_MOSFET OUT
MOSFET OUT.SchDoc
IN
RA4
RB5
RB0_AN12_INT0_SDI_SDA
RB1_AN10_INT1_SCK_SCL
RA5_AN4_SS
FTDI_TXD
R20
33R
Repeat(U_LED,1,7)
LED.SchDoc
Repeat(OUT)
OUT
OUT[1..7]
U_3V3_Regler
3V3_Regler.SchDoc
U_MAX6675
MAX6675.SchDoc
K9
K10
T-
T+
MAX6675_/CS
MAX6675_SCK
MAX6675_MISO
R23
R24
R25
33R
oder MAX31855 (pinkompatibel)
R21
Varistor
R22
Varistor
P4
P5
Header 4
Header 6
3V3
R26
4K7
R27
4K7
K11
K12
R28
R29
R30
P6
Header 7X2A

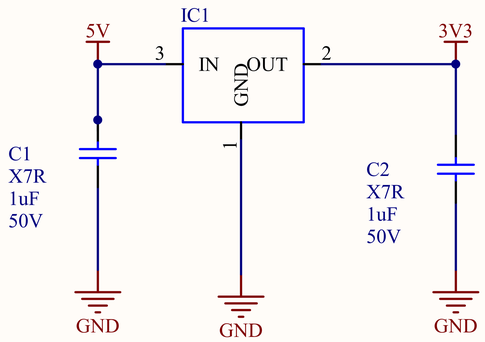
VRG_XC6206P332MR/SOT23
IC1
5V
3V3
3
2
1
IN
OUT
GND
C1
X7R
1uF
50V
C2
X7R
1uF
50V
GND
GND
GND

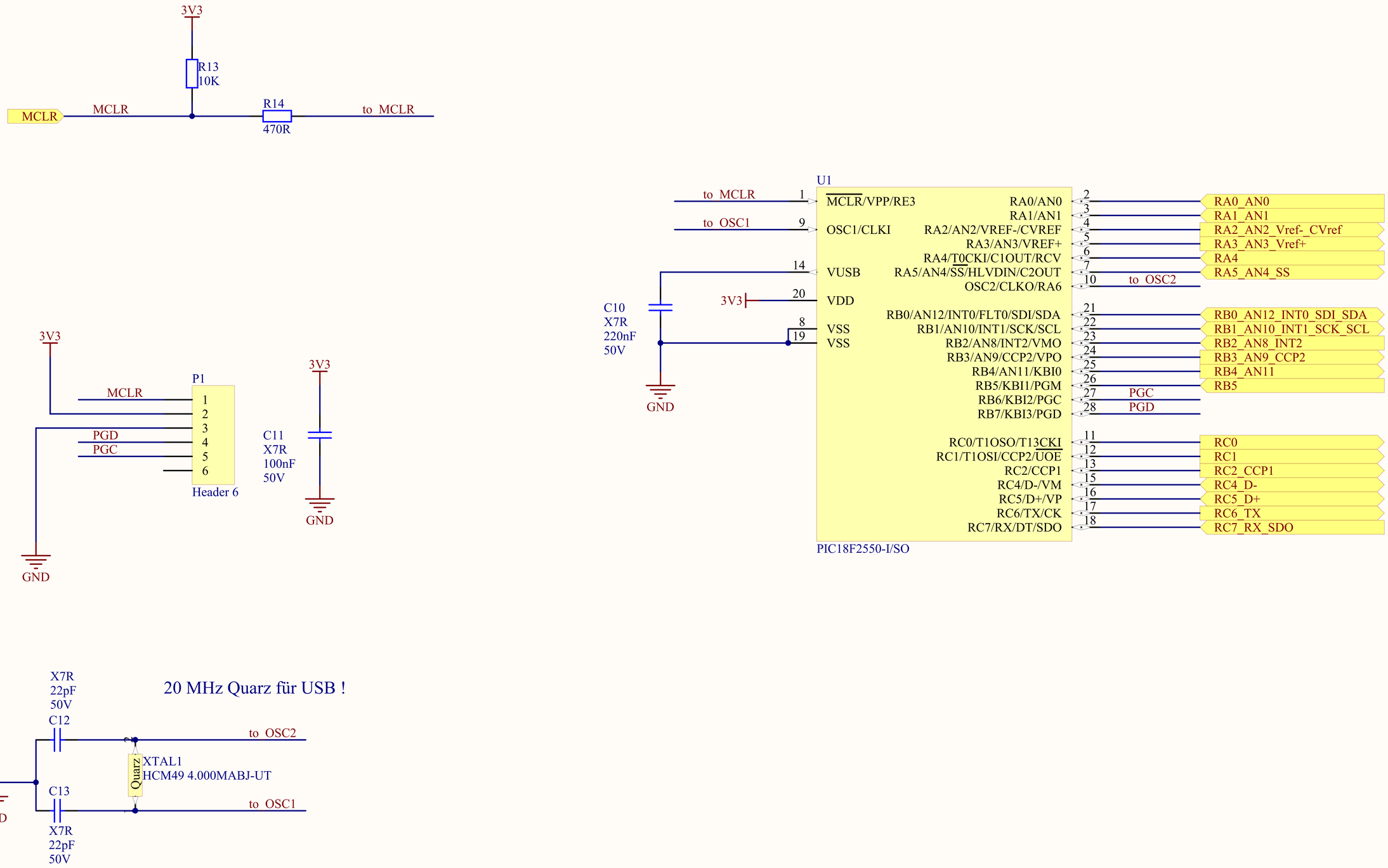
3V3
R13
10K
MCLR
MCLR
R14
470R
to_MCLR
U1
to_MCLR
to_OSC1
MCLR/VPP/RE3
OSC1/CLKI
VUSB
VDD
VSS
VSS
RA0/AN0
RA1/AN1
RA2/AN2/VREF-/CVREF
RA3/AN3/VREF+
RA4/T0CKI/C1OUT/RCV
RA5/AN4/SS/HLVDIN/C2OUT
OSC2/CLKO/RA6
RB0/AN12/INT0/FLT0/SDI/SDA
RB1/AN10/INT1/SCK/SCL
RB2/AN8/INT2/VMO
RB3/AN9/CCP2/VPO
RB4/AN11/KBI0
RB5/KBI1/PGM
RB6/KBI2/PGC
RB7/KBI3/PGD
RC0/T1OSO/T13CKI
RC1/T1OSI/CCP2/UOE
RC2/CCP1
RC4/D-/VM
RC5/D+/VP
RC6/TX/CK
RC7/RX/DT/SDO
to_OSC2
PGC
PGD
RA0_AN0
RA1_AN1
RA2_AN2_Vref-_CVref
RA3_AN3_Vref+
RA4
RA5_AN4_SS
RB0_AN12_INT0_SDI_SDA
RB1_AN10_INT1_SCK_SCL
RB2_AN8_INT2
RB3_AN9_CCP2
RB4_AN11
RB5
RC0
RC1
RC2_CCP1
RC4_D-
RC5_D+
RC6_TX
RC7_RX_SDO
PIC18F2550-I/SO
C10
X7R
220nF
50V
3V3
GND
3V3
P1
MCLR
PGD
PGC
Header 6
C11
X7R
100nF
50V
3V3
GND
GND
X7R
22pF
50V
C12
C13
X7R
22pF
50V
20 MHz Quarz für USB !
to_OSC2
to_OSC1
XTAL1
HCM49 4.000MABJ-UT
Quarz
GND

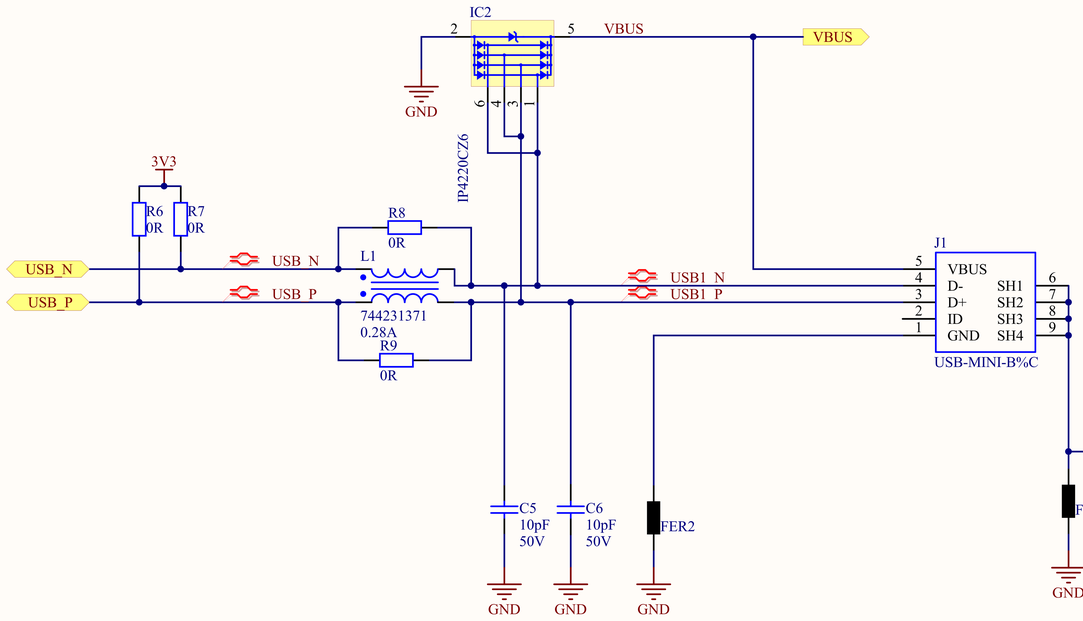
IC2
2
5
VBUS
VBUS
GND
6
4
3
1
IP4220CZ6
3V3
R6
0R
R7
0R
R8
0R
USB_N
USB_P
USB_N
USB_P
L1
744231371
0.28A
R9
0R
USB1_N
USB1_P
J1
5
4
3
2
1
VBUS
D-
D+
ID
GND
SH1
SH2
SH3
SH4
6
7
8
9
USB-MINI-B%C
C5
10pF
50V
C6
10pF
50V
FER2
FER1
C7
10nF
50V
GND
GND
GND
GND
GND

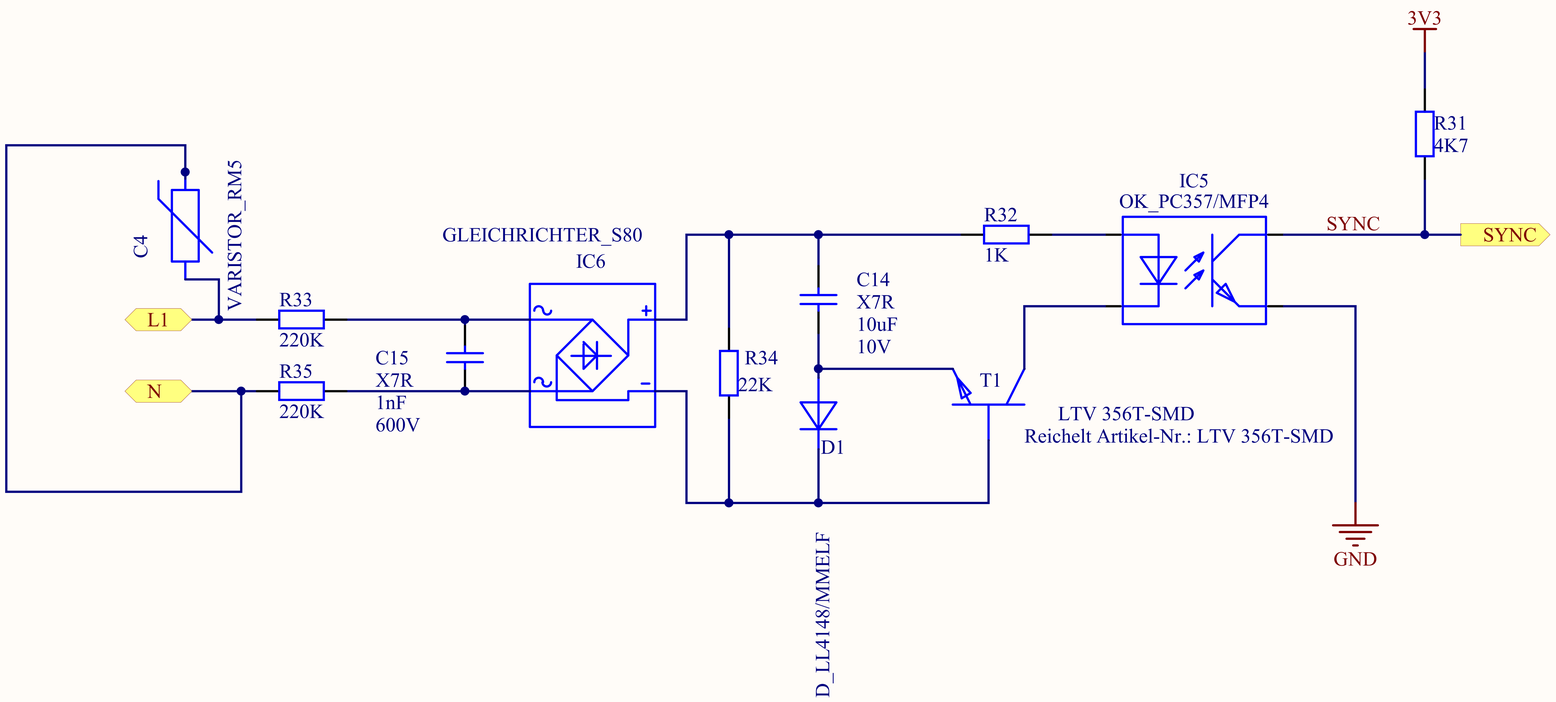
3V3
R31
4K7
IC5
OK_PC357/MFP4
SYNC
SYNC
R32
1K
GLEICHRICHTER_S80
IC6
C4
VARISTOR_RM5
L1
R33
220K
N
R35
220K
C15
X7R
1nF
600V
C14
X7R
10uF
10V
R34
22K
D1
T1
LTV 356T-SMD
Reichelt Artikel-Nr.: LTV 356T-SMD
GND
D_LL4148/MMELF

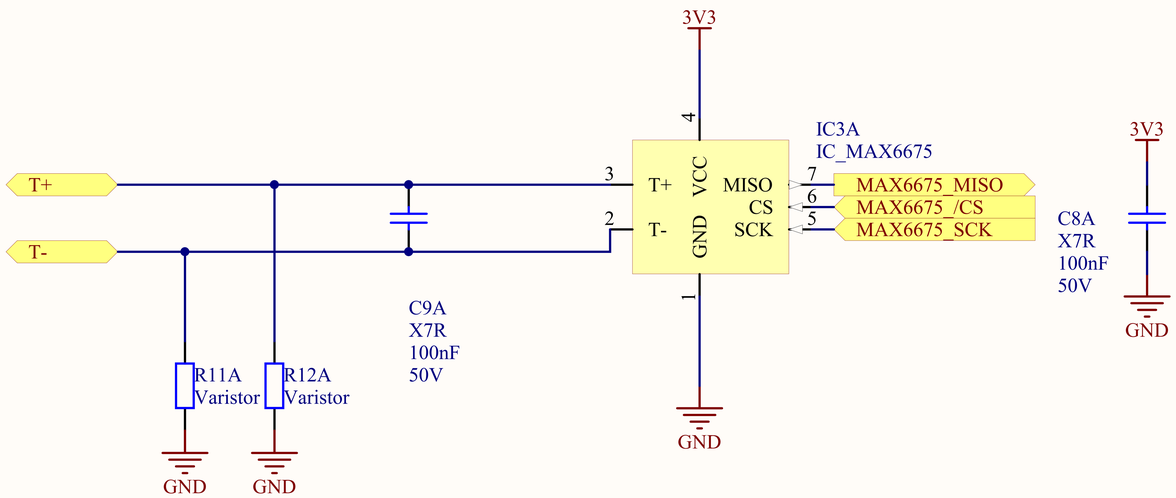
3V3
4
IC3A
IC_MAX6675
T+
T-
3
2
T+
T-
VCC
GND
MISO
CS
SCK
7
6
5
MAX6675_MISO
MAX6675_/CS
MAX6675_SCK
1
GND
C8A
X7R
100nF
50V
3V3
GND
C9A
X7R
100nF
50V
R11A
Varistor
R12A
Varistor
GND
GND

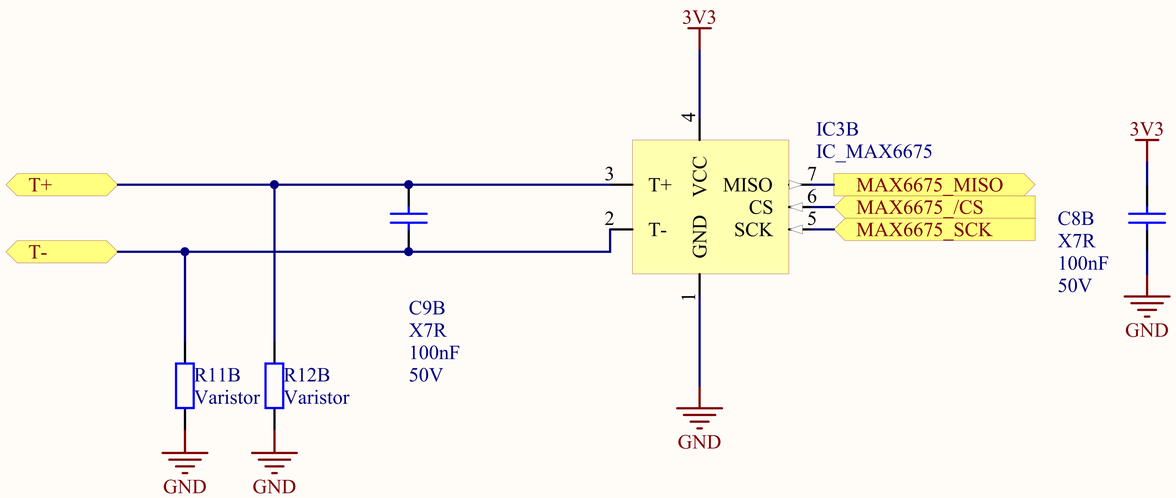
3V3
4
IC3B
IC_MAX6675
3V3
T+
3
T+
VCC
MISO
7
MAX6675_MISO
T-
2
T-
GND
CS
6
MAX6675_/CS
SCK
5
MAX6675_SCK
C8B
X7R
100nF
50V
GND
C9B
X7R
100nF
50V
1
R11B
Varistor
R12B
Varistor
GND
GND
GND

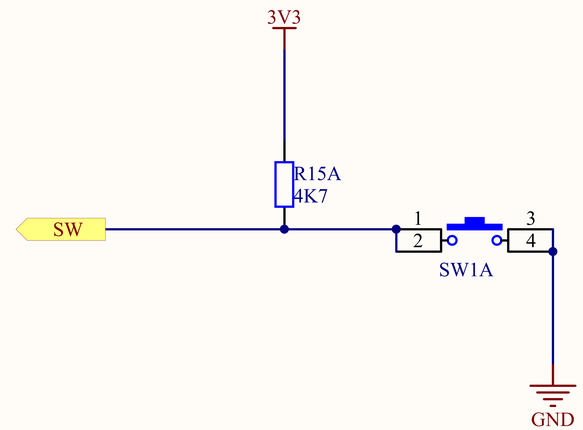
3V3
R15A
4K7
SW
1
2
3
4
SW1A
GND

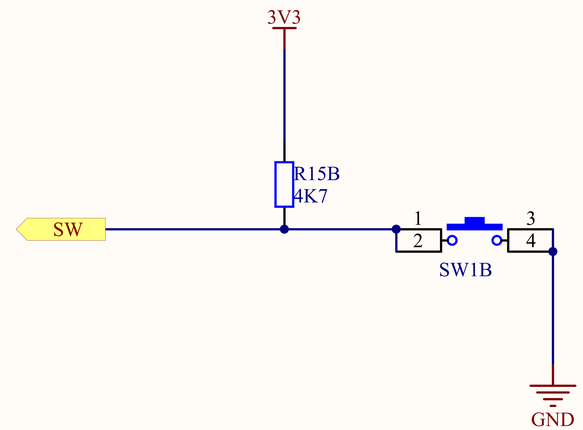
3V3
R15B
4K7
SW
1
2
3
4
SW1B
GND

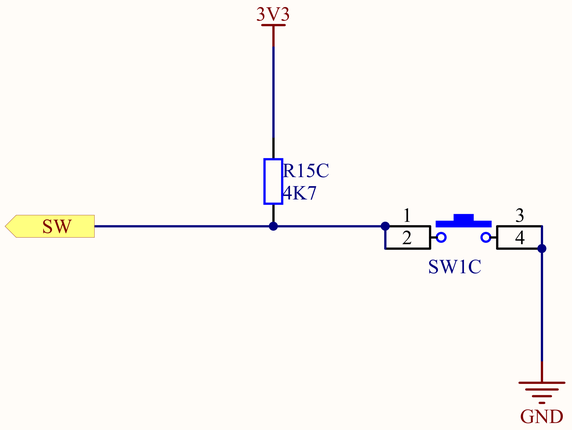
3V3
R15C
4K7
SW
1
2
3
4
SW1C
GND

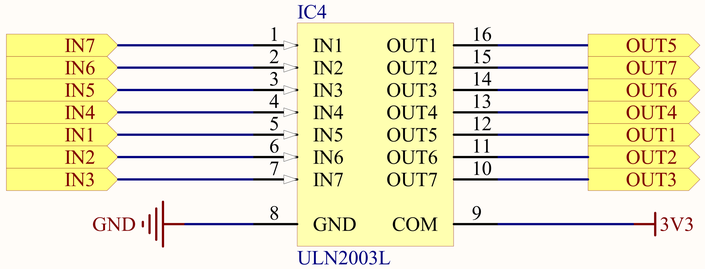
IC4
IN7
IN6
IN5
IN4
IN1
IN2
IN3
1
2
3
4
5
6
7
IN1
IN2
IN3
IN4
IN5
IN6
IN7
OUT1
OUT2
OUT3
OUT4
OUT5
OUT6
OUT7
16
15
14
13
12
11
10
OUT5
OUT7
OUT6
OUT4
OUT1
OUT2
OUT3
GND
8
GND
COM
9
3V3
ULN2003L

3V3
R10A
330R
OPTO1A
OUT

3V3
R10B
330R
OPTO1B
OUT

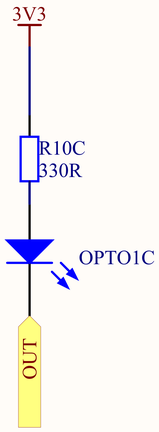
3V3
R10C
330R
OPTO1C
OUT

3V3
R10D
330R
OPTO1D
OUT

3V3
R10E
330R
OPTO1E
OUT

3V3
R10F
330R
OPTO1F
OUT

3V3
R10G
330R
OPTO1G
OUT

Vforward = 1.2 to 1.5 V
IforwardToTrigger IS6005 = 5 mA
Vdd = 3.3V
R = (Vdd - Vforward) / IforwardToTrigger
R = (3.3V - 1.2V) / 0.005 A = 420R
Ractual = 330R
Iactual = (Vdd - Vforward) / Ractual
Iactual = (3.3V - 1.2V) / 330R = 6.36mA
Pdiss = Iactual ^2 * Ractual
Pdiss = 6.36mA ^2 * 330R = 13.35mW

47R to 100R + 47nF to 100nF
e.g. 47R + 22nF

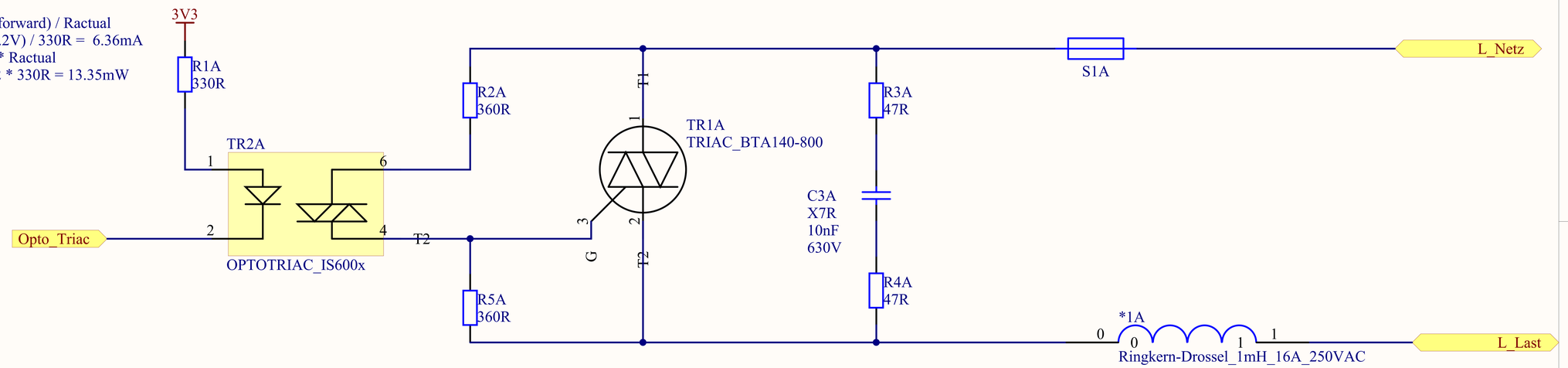

Spule / Drossel 1,5 mH
Conrad: 534455-63

Vforward = 1.2 to 1.5 V
IforwardToTrigger IS6005 = 5 mA
Vdd = 3.3V
R = (Vdd - Vforward) / IforwardToTrigger
R = (3.3V - 1.2V) / 0.005 A = 420R
Ractual = 330R
Iactual = (Vdd - Vforward) / Ractual
Iactual = (3.3V - 1.2V) / 330R = 6.36mA
Pdiss = Iactual ^2 * Ractual
Pdiss = 6.36mA ^2 * 330R = 13.35mW

47R to 100R + 47nF to 100nF
e.g. 47R + 22nF

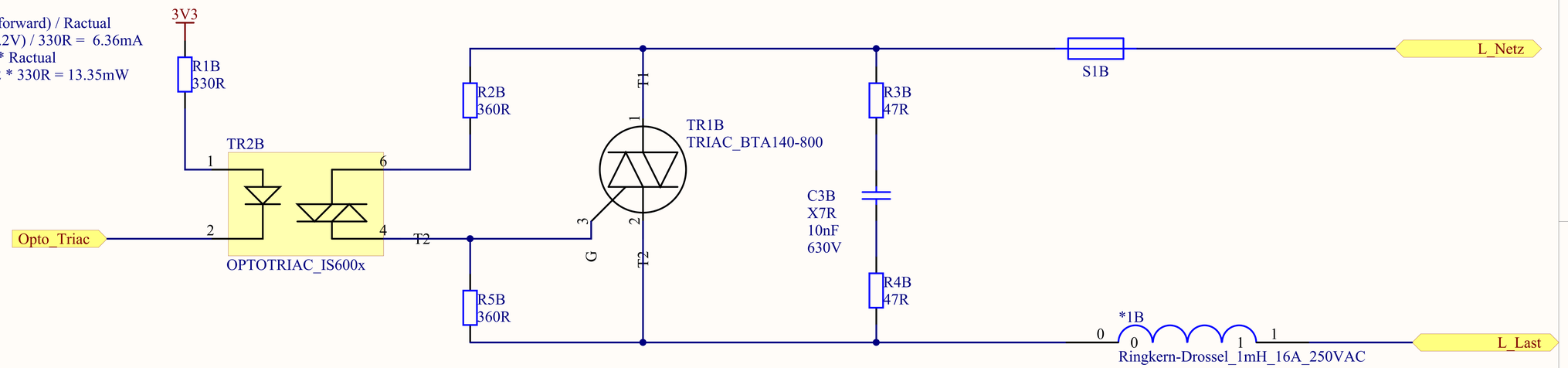

Spule / Drossel 1,5 mH
Conrad: 534455-63

Vforward = 1.2 to 1.5 V
IforwardToTrigger IS6005 = 5 mA
Vdd = 3.3V
R = (Vdd - Vforward) / IforwardToTrigger
R = (3.3V - 1.2V) / 0.005 A = 420R
Ractual = 330R
Iactual = (Vdd - Vforward) / Ractual
Iactual = (3.3V - 1.2V) / 330R = 6.36mA
Pdiss = Iactual ^2 * Ractual
Pdiss = 6.36mA ^2 * 330R = 13.35mW

47R to 100R + 47nF to 100nF
e.g. 47R + 22nF

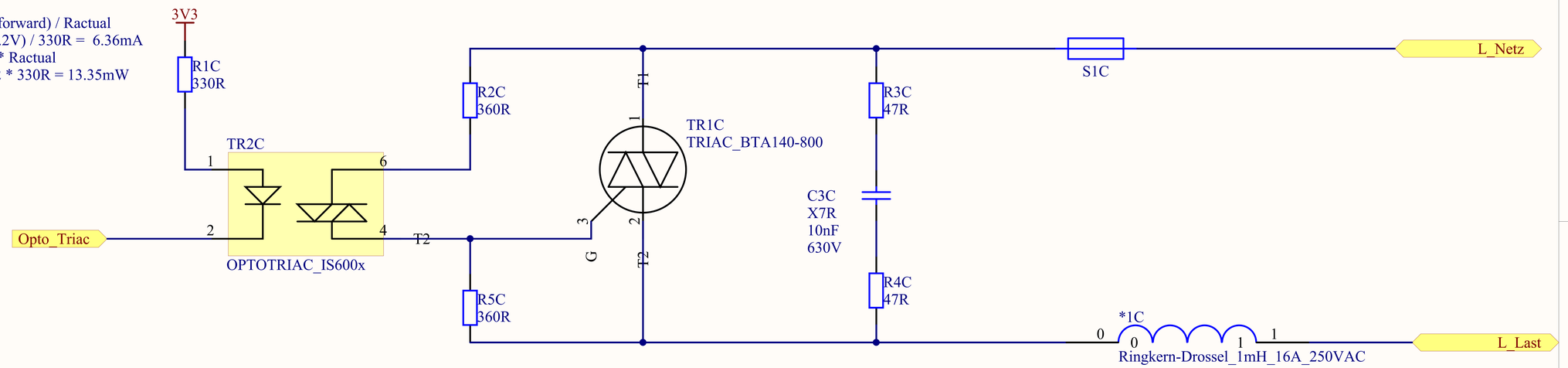

Spule / Drossel 1,5 mH
Conrad: 534455-63

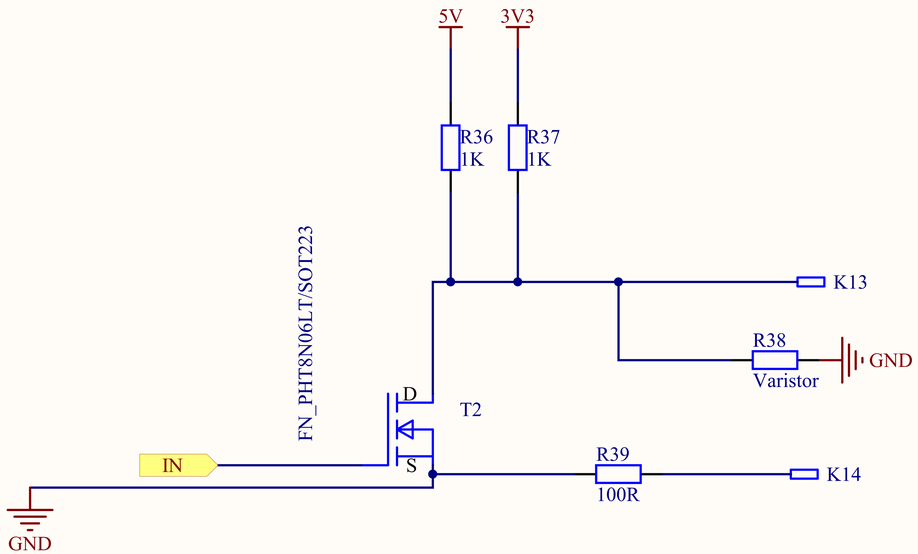
5V
3V3
R36
1K
R37
1K
K13
R38
Varistor
GND
FN_PHT8N06LT/SOT223
D
T2
IN
S
R39
100R
K14
GND