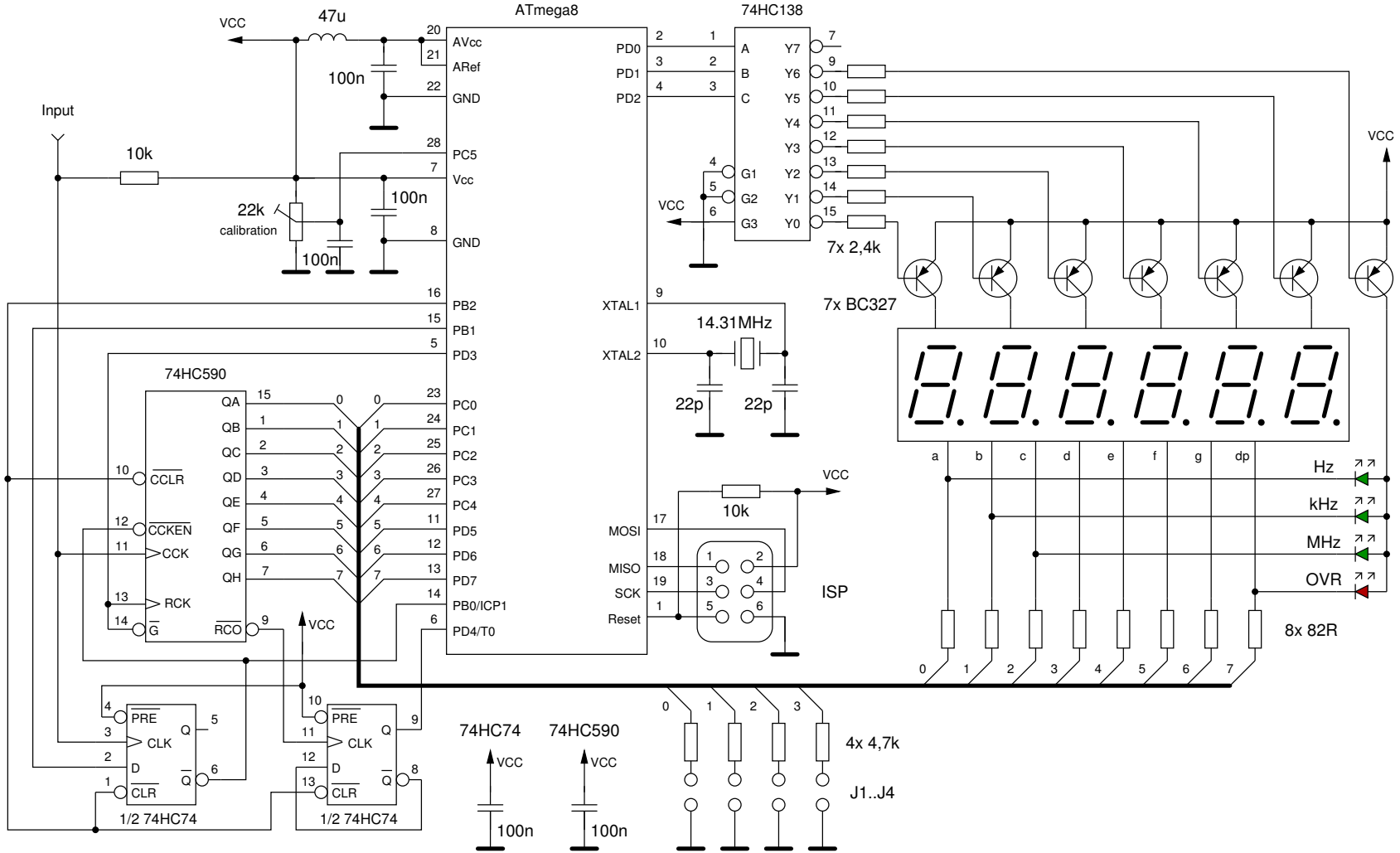
ATmega8
74HC138
74HC590
74HC74
VCC
47u
100n
Input
10k
22k
calibration
AVcc
ARef
GND
PC5
Vcc
PB2
PB1
PD3
PC0
PC1
PC2
PC3
PC4
PD5
PD6
PD7
PB0/ICP1
PD4/T0
PD0
PD1
PD2
XTAL1
XTAL2
MOSI
MISO
SCK
Reset
14.31MHz
22p
ISP
7x 2,4k
7x BC327
8x 82R
4x 4,7k
J1..J4
Hz
kHz
MHz
OVR
a
b
c
d
e
f
g
dp
QA
QB
QC
QD
QE
QF
QG
QH
CCLR
CCKEN
CCK
RCK
G
RCO
PRE
CLK
D
CLR
Q
1/2 74HC74