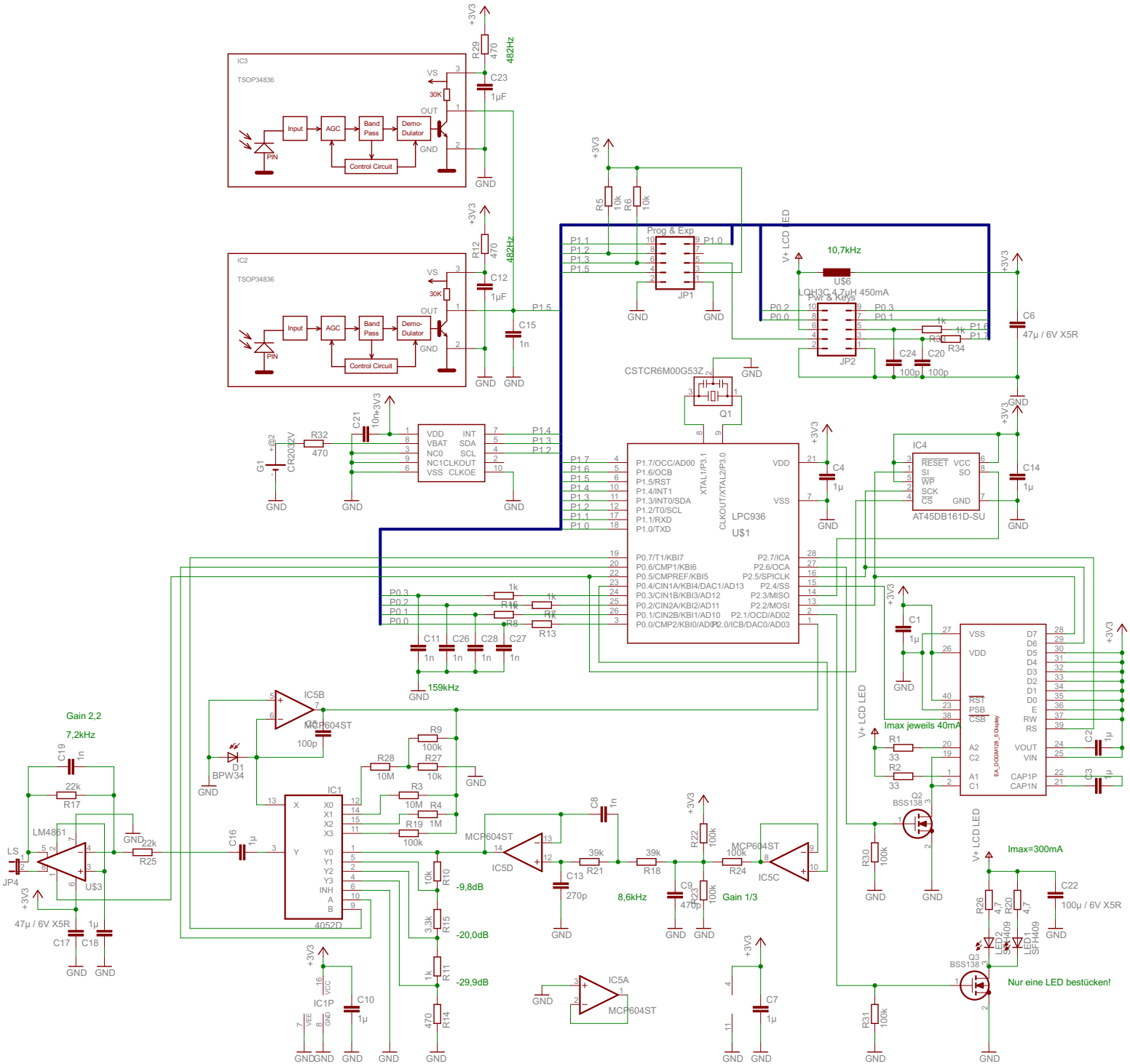

22.05.2013 22:32:13 f=0.68 C:\Users\Martin\Documents\eagle\LEDLampe\LED-Lampe MCU.sch (Sheet: 1/1)